551DN–01

COMPONENTS

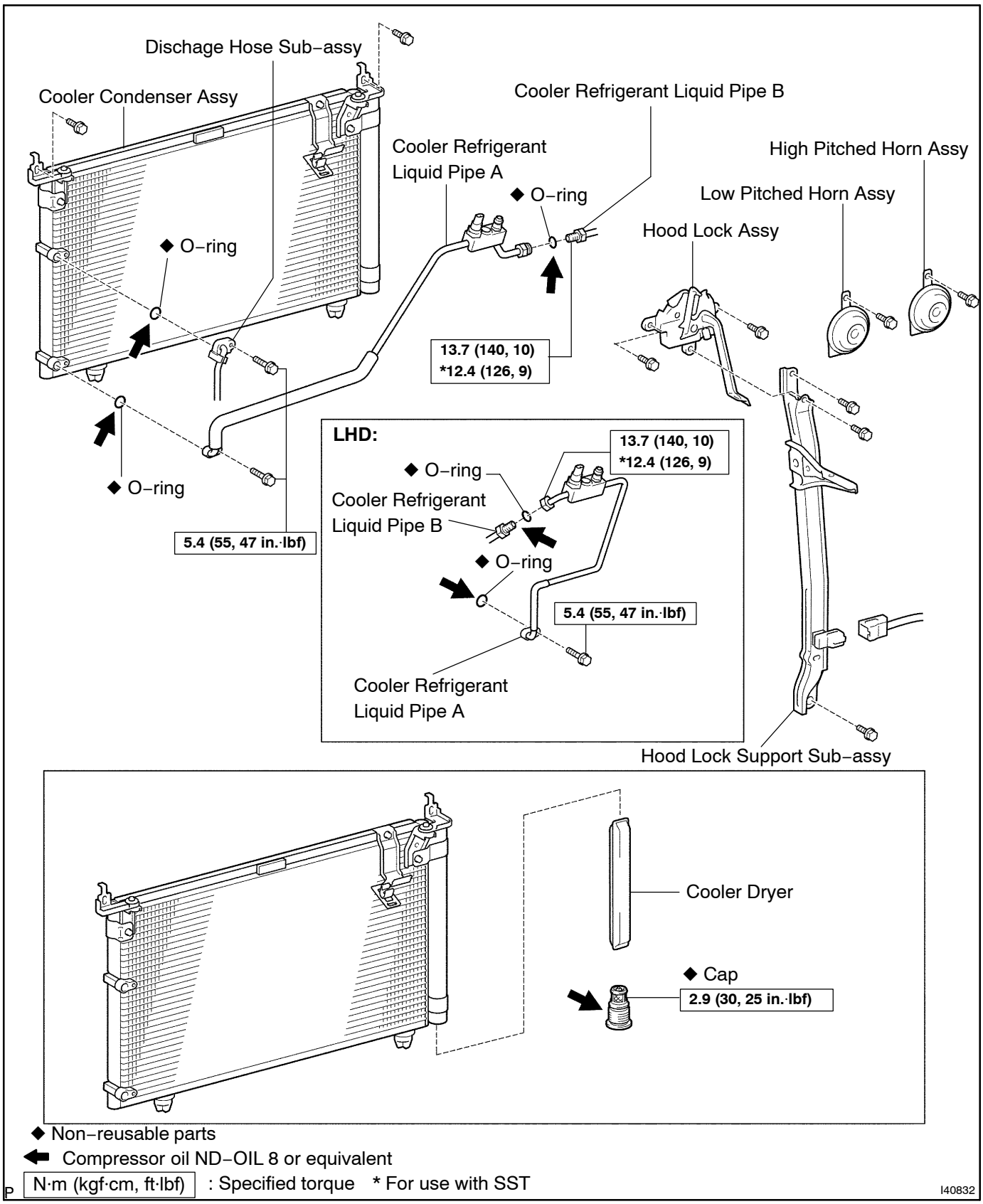

◆ Non–reusable parts

⬅ Compressor oil ND–OIL 8 or equivalent

N·m (kgf·cm, ft·lbf) : Specified torque * For use with SST

I40832